eNoise Control
297 North 9th Street, Noblesville, IN 46060
Toll Free Phone: 888.213.4711 Fax: 317.774.1911

Deep Well Pump Sound Enclosure

Well Pumps are critical for areas of the country that don't have a high water table, or lack a stable supply of potable water near the surface. Without a suitable water table, and to achieve the same result, it is required to dig deeper. A deep well means that the water has to be lifted farther, therefore the strategies for moving it change. Deep wells require large motors that are used for turning the pump. This type of operation is typically outdoors. If the facility is Located near a noise sensitive area, an *outdoor well pump sound enclosure* is recommended.

Below are several examples of Well Pump Sound Enclosures with silenced ventilation, removable panels and complete enclosure lift-off option.

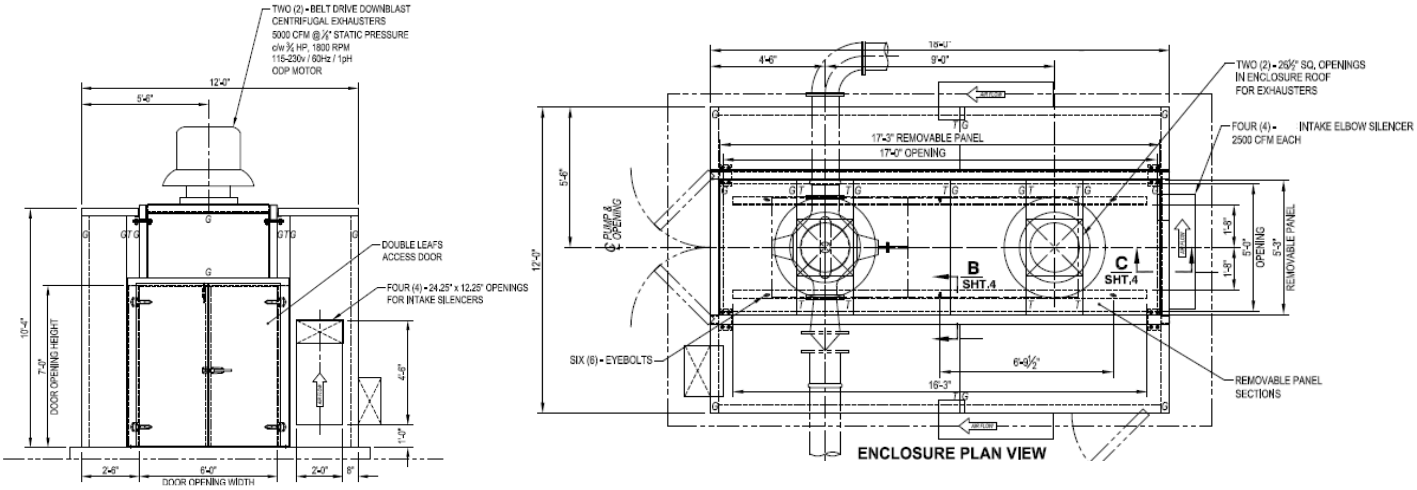

Well Pump Sound Enclosure with access doors, silenced ventilation, and lift-off roof.

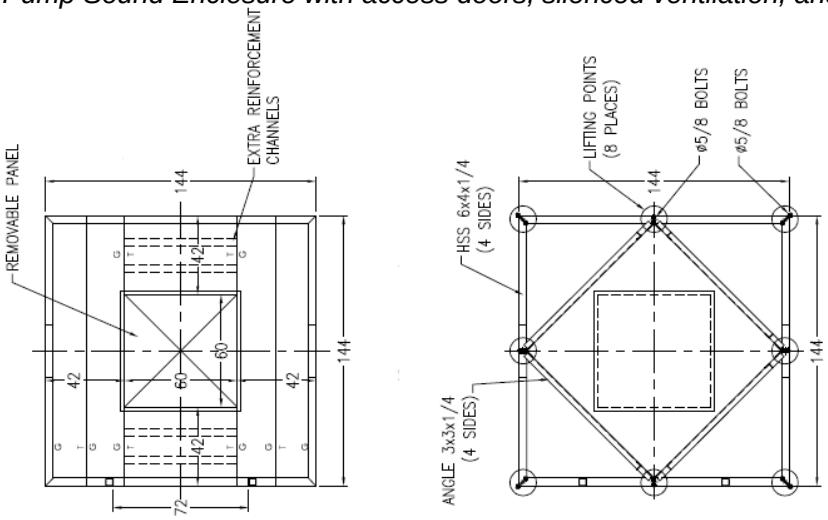

Top view of structural and acoustic panels for entire Sound Enclosure lift-off option.